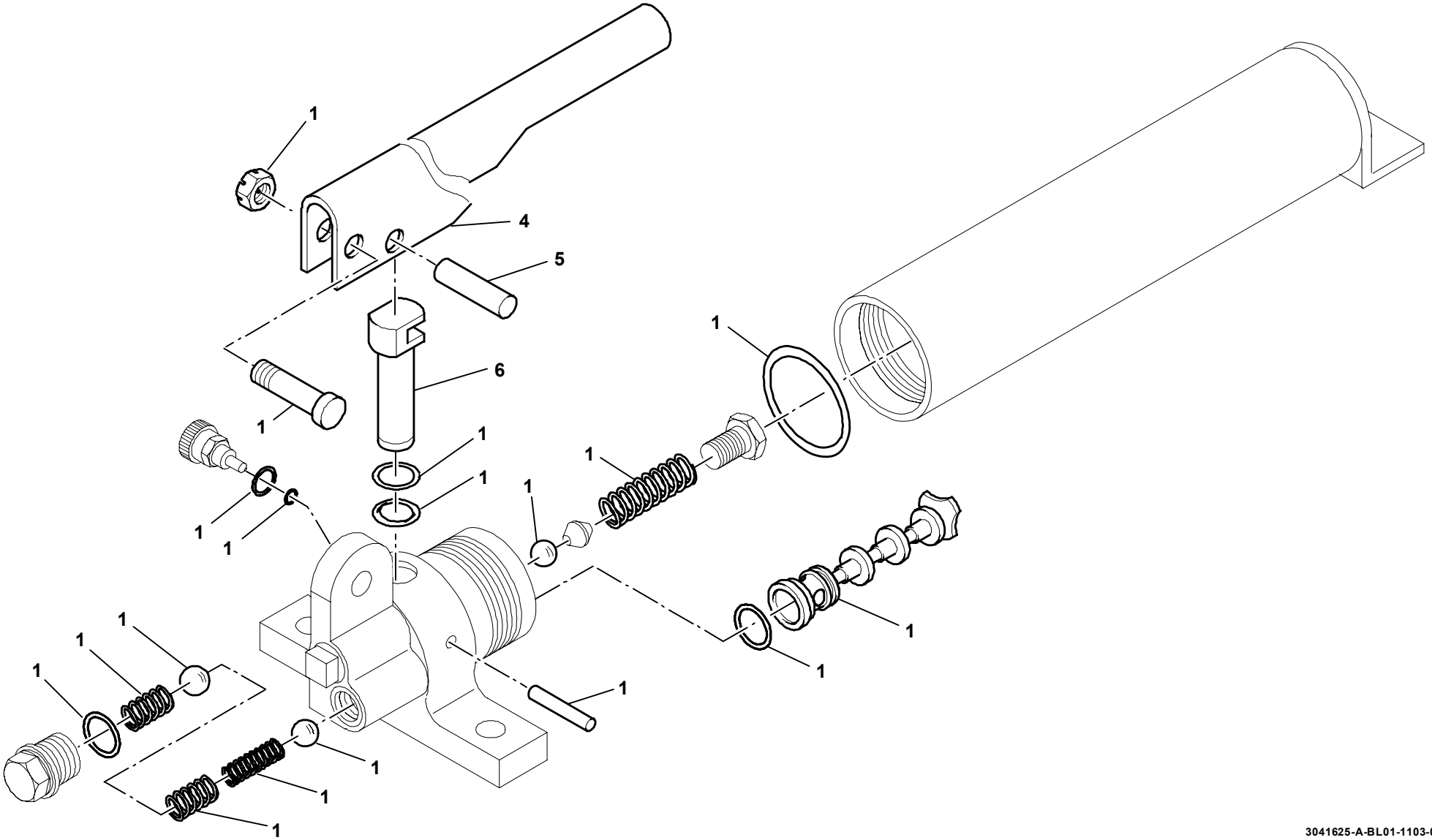GROVE	HANDPUMPE HAND PUMP	BILDTAFEL PICTORIAL DISPLAY			GMK 6300 BE 710
		11.03	3041625-ETL A	1/1	G 173